For the full IFU (Instructions for use) see Haag-Streit UK website
www.haagstreituk.com/ifu

Haag-Streit UK Ltd.,
Edinburgh Way,
Harlow,
Essex CM20 2TT UK

Tele: 01279 414969 International: +44 1279 414969
Fax: 01279 635232 International: +44 1279 635232

Catalogue number: 1902499
Issue number: 4 03/15

CE 0120

CLEMENT CLARKE
OPHTHALMIC

Synoptophore

Instruction Manual

Models 2001, 2002, 2003

Synoptophore

Contents

The suppliers cannot accept responsibility for the performance, reliability or safety of this equipment if it has been installed, serviced or modified by unauthorised persons. The equipment must be connected only to an approved electrical supply and used in accordance with this instruction booklet.
Users may obtain, on request, information sufficient to allow repairs to those parts classified by the suppliers as repairable.

Whilst this information is provided in good faith and is based on the latest information available at the time of issue, this manual gives only a general indication of product capacity, performance and suitability. Such information must not be taken as establishing any contractural or other commitment on the part of the manufacturer and in no way should be constructed as a warranty or representation concerning the product.

1. Symbol Explanations

	Caution, consult accompanying documents		Consult 'Instructions for Use'
I O	On Off	L	Left
	Forward	R	Right
	Reverse	HYPER	Vertical Deviation Scale
	Variable	E.D.	Elevation and Depression Scale
	Rapid	P.D.	Interpupillary Distance Scale
	Slide Illumination	ABD/ADD	Horizontal Vergence Scale
	Alternating		Type B Equipment
	Simultaneous	~	A.C. (Alternating Current)
	Normal	CYCLO	Torsional Deviation Scale
	Danger	SN	Serial Number
	Auto Flash		Fuse
	Manual Flash	H.B.	Haldingers Brushes
	After Image	●	Outward Position (slides only)
	Manufacturer		Year of Manufacture
			Do not dispose of with household refuse
		CE 0120	This product complies with the essential requirements of the medical devices directive (93/42/EEC). Compliance has been verified by UK notified body per 0120 (SGS United Kingdom Ltd).
			TUV Logo Classification Mark

Amendment to Scale ref. :-

103	IPD Scale	+/- 1mm
109	Horizontal, Dev, Scale	+/- 1/2 degree
110	Vertical, Dev, Scale	+/- 1/4 degree
114	Elevation/Depression Scale	+/- 1/2 degree
110	ABD/ADD Scale	+/- 1 degree

2. Intended Use

The fundamental parts of the Synoptophore are two independently movable sight tubes. With the instrument set at zero (sight lines parallel) the two images, superimposed, will be seen as one integrated figure by a subject with normal binocular vision. A subject with strabismus, divergent or convergent, will only see a superimposed (fused) figure with ease, when the sight tubes are set at an angle to each other (angle of deviation). The muscles are exercised by looking through the tubes at the deviation angle and moving them laterally in unison, so that the subject scans left and right alternatively. Single eye exercise can be given by gradually changing the angle between the sight tubes whilst the subject maintains fusion for as long as possible.

3. Safety and Regulatory Information

- The Synoptophore may only be exposed to the following environmental/ambient conditions for transportation, storage purposes:

  Ambient temperature: -40˚C to 70˚C

  Humidity: 10-95% RH

  Atmospheric pressure: 500hPa to 1060hPa

- The Synoptophore should be checked for damage after unpacking.

- Defective equipment should always be returned in appropriate packaging.

Notes on Usage

- Only qualified and trained personnel may operate the equipment.

- The training of the operating personnel is the responsibility of the equipment user.

- This type of sensitive measuring equipment should be checked after exposure to external force (e.g. unintentional shocks or being allowed to fall) and if necessary, should be returned to the manufacturer for repair.

- Reinforcement routines on and alterations to the equipment may only be carried out by authorised servicing technicians.

- The manufacturers of the equipment will not be liable for any loss or damage resulting from unauthorised intervention.
  In particular, it is forbidden to loosen any screws; this may reduce the accuracy of the measurement. All ensuing warranty claims will be deemed null and void as a result of unauthorised intervention.

Parts in contact with the body:
Chin Rest, Forehead Rest, eye piece and Handles for adjustment of the horizontal angle between tubes, are the applied parts.

- Operating temperature +10˚C to +40˚C.

⚠ **Warning:**
To avoid risk of electric shock, this equipment must only be connected to a mains supply with protective earth.

⚠ **Please Note:**
The HB Motor should not be run continuously. Please switch off between patients.

⚠ **Please Note:**
The weight of the instrument should not exceed 20Kg.

⚠ **Please Note:**
Position the equipment making sure the power lead and plug are easily accessible.

⚠ **Please Note:**
It is recommeded that the Synoptophore is serviced annually.

⚠ **Warning:**
No modification of this equipment is allowed.

Recommended Fuse:

Littelfuse, 5 x 20mm, time lag fuse 213 series is recommended.

Statutory Requirements

- The Synoptophore is designed as a Class 1 device with a measuring function device under rule 12 of the Medical Device Directive 93/42/EEC.

- The Synoptophore complies with the Ophthalmic regulation ISO 10944:2009 & EN ISO 15004-1:2006.

Caution

- The safety regulations displayed in the operating instructions are to be observed with special care.

⚠ **Caution**
Strictly observe all warning notices!

Electrical Specifications

Voltage: 110V 60Hz/230V 50Hz, 54VA

Fuse Rating: T1AL, T500mAL, 250V AC

Regulatory Information: CE-Mark

The products fulfill the requirements according to the following standards:

Safety: EN60601-1 Part 1:
General Requirements for Safety,
Medical Electrical Equipment

Electrical: EN60601-1-2 Part 2: Collateral Standard:
Electromagnetic Compatibility

Environmental Conditions

Conditions for safe operation of the Product:
Ambient temperature: +10˚C to +40˚C
Humidity: 30% rh to 75% rh
Atmospheric pressure: 700hPa to 1060hPa

Dust Cover

A cover is provided to prevent dust accumulating.
⚠ **Please switch the device off before covering.**

Synoptophore Panels - General Layout

The following instructions are intended to assist the user to become rapidly familiar with the various controls of the Synoptophore. Although some brief references to the orthoptic usage of the instrument have been given, it is obviously beyond the scope of this manual to detail the precise methods of examination and treatment of which the Synoptophore is capable.

The figures in brackets on this description refer to the illustrations of the particular model 2001, 2002 or 2003 pages 12, 13 & 14.

⚠ **Please Note:**
The HB Motor should not be run continuously. Please switch off between patients.

4. To remove the instrument from the packing case and subsequent handling.

⚠ **Lift Synoptophore by handles (101), NOT by the optical tubes.**

5. Connection to electricity supply (a.c. only).

Check the voltage of your electrical supply and ensure that the voltage selector (126, p12) corresponds to this.

Switch the instrument on at (124, rocker switch) and check that the green indicator lamp is working.

6. Adjusting the Synoptophore to the patient.

(a) Free the optical tubes by releasing the central lock (122) and the two tube locks (121) which should be turned inwards.

(b) Set the selector switch (131) to 'NORMAL'.

(c) Measure the patient's interpupillary distance and and set the pointer on the scale (103) accordingly, by means of the controls (102).

(d) Adjust the height of the chinrest (105) by means of control (104).

(e) Adjust the projection of the chinrest, by sliding it toward or away from the patient, so that the patient's eyes are as close as possible to the eye pieces.

(f) Adjust the projection of the forehead rest (106, p12) to accord with (e) above.

(g) Set all the pointers at zero:-
Pointers on horizontal deviation scales (109, p12) by means of handles (108, p12). Pointers on vertical deviation scales (111) by means of controls (110). Pointers on torsional deviation scales (112) by means of controls (113). Pointers on elevation and depression scales (114) by means of controls (115).

7. Measuring the angle alpha.

The angle alpha is the angle between the optic axis of the eye and the visual axis. Often this can be large enough to give the appearance of a squint or to mask a squint and therefore it should be assessed. In fact it cannot be measured, but a close approximation can be made by using the special slide A15 which is available. Place the slide in either one of the slide carriers (116) and instruct the patient to look at the zero mark. Observe the reflection of the light on the patient's cornea and if this is not in the centre of the pupil the patient is told to look at successive numbers, or letters, until the reflection is in the centre. Adjoining letters and numbers are separated by one degree, thus if the patient is fixing on 'E' when the corneal reflex is central, the angle alpha can be recorded as 5°. It is positive when nasal, and negative when temporal, and the sign, too, must be recorded. Having measured one eye, then the same procedure should be carried out with the other eye fixing.

8. Measuring the objective angle.

If possible, the objective angle of deviation should be measured with each eye in turn fixing. A pair of slides from the simultaneous perception range is used of a size large enough to be seen clearly but small enough to ensure fixation on a central point. The patient is instructed to look at the slides and the tubes are then converged or diverged by the operator until the corneal reflections are seen to be central. One light is extinguished by depressing one of the two flashing switches (129) and the patient is told to concentrate on the picture still illuminated. On being satisfied that fixation is accurate the light for that eye is extinguished at the same time as the light before the other eye is turned on. The non-fixing eye is then observed and any movement to take up fixation is compensated for by converging or diverging the tube. Vertical movements will also be noted and the tube moved correspondingly by the appropriate vertical deviation control (110).

The patient is then told to fix the picture as before and the procedure is repeated until there is no further movement of the non-fixing eye when it takes up fixation. The angle obtained is the objective angle. The examination is now repeated with the other eye fixing. Similar measurements will be made with the patient looking 15° to the left, 15° to the right, 15° up and 15° down (the last two by using the elevation and depression controls (115)). In cases where there is poor fixation in one eye the measurements will be made with the good eye fixing only, and the tubes will be moved until the corneal reflections are in the centre of the pupils.

9. The subjective angle and abnormal retinal correspondence.

The subjective angle is found by instructing the patient to move the handles (108) himself until the two pictures are superimposed. If this angle is the same as the objective angle, when small pictures are used, the retinal correspondence is normal. If, however, the angles differ, the retinal correspondence is abnormal and the difference between the two is the angle of anomaly. These measurements are made with the patient's prescribed correction; the appropriate lenses are fitted into lens holders (118). The patient is then measured without corrective lenses.

10. Side movements.

Lateral movements are valuable as a test of fusion and as an orthoptic exercise. With a pair of slides from the fusion range in the slide carriers and the tubes set at an angle of deviation, the two tube locking controls (121) are turned outwards. The central lock (122) must be released. The tubes are then moved side to side and the patient is instructed to follow the movements of the pictures.

11. Vergences.

Horizontal vergences are measured on the scale (119) which is engraved 'ADD' (Adduction - the uniocular movement of the eye horizontally **IN**wards) and 'ABD' (Abduction - the uniocular movement of the eye horizontally **OUT**wards). Set the tubes at the angle of deviation and the scale (119) at whichever zero mark is appropriate. A pair of fusion slides must be used in the slide carriers. Tighten the two tube locking controls (121) and engage the central lock (122). Slowly rotate one or both controls (121) whereupon the tubes will be converged or diverged, according to the requirements. The angle through which fusional vergence is held by the patient is indicated on scale (119) and the point where the pictures 'break', fusion is no longer maintained.

Vertical vergences are measured by rotating one or other of the elevation and depression controls (115). In both cases the corneal reflections should be kept under observation.

12. Heterophoria.

Examination and measurement of cyclophoria is possible with the Synoptophore by means of the rotating slide carriers operated by controls (113). Each carrier rotates 20° on either side of zero. The phoria is indicated on scales (112).
Hyperphoria is measured on scales (110) in prism dioptres, for the slide carriers move tangentially up and down by the action of controls (111).

13. Dimming rheostats.

A rotary rheostat is in circuit with each of the 6V. slide illumination lamps. By means of the controls (130) these rheostats reduce the intensity of the light as required. In certain post-operative cases it is desirable to lesson the light reaching the patient's eye, whilst when treating amblyopes it may be necessary to reduce the illumination in front of the good eye and maintain the maximum light in front of the amblyopic eye.

14. Hand flashing switches.

The two buttons (129) operate micro-switches, one of which is in circuit with each of the 6V. lamps. One use has already been described in section 5. A further use is to stimulate a suppressing eye by rapid flashing.

15. Auxiliary lens holders.

The two lens holders (118) fitted into the eyepieces are used to carry additional lenses, when required.

16. Slide ejectors.

The slide ejectors (117) can be used to make the slides 'jump' and therefore stimulate a suppressing eye.

17. Promoting an after-image

(Models 2001and 2002 only).

The after-image device consists of two high intensity light sources each containing a 12V. lamp and a condensing lens. Supplied with the Synoptophore are two special slides, S.3 and S.4, one consisting of a vertical white slit, with a red central fixation point on a black background and the other a horizontal slit also with red spot. These slides are inserted into the carriers **with the matt surface inwards,** i.e. towards the patient. The opal defusing screens must be swivelled down-wards out of the optical pathway by rotating the black plastic control levers (123) situated immediately below the latch of the lamphousing. This allows more light to pass through the slide and thus a stronger after-image is produced. The selector switch (131) is turned clockwise to the first position 'R', and the mains switch (124) is turned on. Instruct the patient to fix the red spot and ensure that his fixation remains steady for a period of some 7 to 10 seconds. Turn the selector switch clockwise to the next stop, which is an 'off' position, remove the right eye slide and swivel back the diffusing screen. Then turn the selector switch clockwise to the next position 'L' and ask the patient to fix the red spot for the prescribed time. Finally, turn the switch still further to one of the 'off' positions, whilst you remove the left eye slide and swivel back the diffusing screen.

An after-image is maintained more easily when the background is alternating light and dark, therefore the automatic flashing unit should be used immediately after the patient has been subjected to the above. This is done simply by rotating still further the selector switch until the stop marked 'Both eyes' is reached. If normal retinal correspondence exists, the patient will now see an after-image in the form of a cross + but if the retinal correspondence is abnormal the after-image may be a variant of one or other of the following: I- or -I. The result should be given graphically and the images labelled accordingly to the eye concerned.

18. The automatic flashing unit

(Models 2001 and 2002 only).

The unit is fitted to Synoptophore Models 2001 and 2002. The same unit is used on both instruments. From paragraph 14 above, you will have understood that the flashing unit will only operate the 6V lamps when the selector switch (131) is turned to one of the three automatic flashing positions (red engraving). The three positions are 'Both eyes' 'Left eye and 'Right eye'. If both eyes are to be flashed, for the purpose of maintaining an after-image, the switch (133) can be set at **Simultaneous** or at **Alternating.** If only one eye is being flashed, it makes no difference what position the switch is in. The speed of the flash, or to put it another way, the length of the light and the dark phase, is variable. The fastest flashing (shortest phases) is obtained when switch (132) is set at **'Rapid'**. In that position the light and dark periods are of equal length. To make the flashing slower, switch (137) is moved to the **'Variable'** position and the two controls (134) are now in circuit. One of these controls determines the length of the light phase and the other determines the length of the dark phase. The engraved figures surrounding these two controls do not represent actual lengths of time of the phase. However, the high figures do indicate long phases and the low figures short phases. If, therefore, a slow flash (long phases) is required, with light and dark of equal length, the controls would be set at '10'. When set at '0', the phases would be short; when at '5', medium, and so on. If the relationship between light and dark is required to be unequal, then the two controls would be set as different figures. A little experimentation will soon show what a great variety of flashing can be obtained. Although the figures are empirical, they are of value in as much as they allow the operator to preset the device. Moreover, it may be found that a patient retains an after-image longer with a certain light/dark relationship. The figures can thus be recorded for future use.

19. Haidinger's Brushes

(2001 Model only).

Haidinger's brushes are phenomena caused by polarised light falling upon the macula. As the centre of the brush coincides with the fovea, the use of the phenomenon is indicated in cases of eccentric fixation and abnormal retinal correspondence, for the patient, when he has learned to recognise the brush, can then be made aware of the spatial projection of the fovea and use this point for fixation.

The device in Synoptophore Model 2001 consists of two motorised units (138) which are inserted into the slots in the optical tubes adjacent to the slide carriers, when the brushes are required. At other times the motor units are housed in the special compartments of the instrument table. In addition to the removable parts, the Synoptophore itself has certain other built-in features which are necessary for Haidinger's brush treatment. These are the iris diaphragms (140), the high intensity light switches (130) and the slots in the tubes to take additional blue filters at (139).

Haidinger's brushes can be presented to the patient's left eye, right eye both eyes together. They can be used with after-image or with ordinary slides or with both after-images and slides. Special slides in black and white, on transparent film are available, and are better than coloured slides, for this purpose.

The motor unit (138) or units are inserted into the slots adjacent to the slide carriers (see illustration). The **On/Off** switches (135) on the control unit are turned on and the motors then commence to rotate the polaroid discs. Each motor unit has its own speed control (137) and each has its own reversing switch (136). Some patients will see the brushes more easily than others and the speed of rotation may have some bearing on this. The reversing switches are useful as a test to ensure that the brush is really being observed.

The purpose of the iris diaphragms (140) is to reduce the field of vision and to test whethter a patient who superimposes the Haidinger's brush and the target really fixes centrally or not. If superimposition remains when the aperture is at its smallest, the patient must be viewing the target with the fovea. If a patient who otherwise sees the brush and target fails to do so at the smallest aperture setting fixation is not foveal.

If the Haidinger's brush is presented to one eye only, it is necessary to place a blue filter into the slot (139) before the other eye, so that two eyes are 'balanced'. If the filter is not inserted, the white light will dominate the blue.

20. Changing the lamps and fuse.

It is **Important** that only the correct voltage and wattage lamps are used, otherwise the flashing unit may be damaged. A protective fuse (141) of the cartridge type is fitted on the push and turn principle.

Models 2001 and 2002 each contain two 6V lamps and two 12V quartz-halogen lamps. Model 2003 contains two 6V lamps only.

The 6V lamps are the slide illuminators and the 12V lamps provide the illumination for promoting after-images and Haidinger's brushes.

To exchange a 6V lamp, open lamphousing (127) and unscrew the faulty lamp (turn anti-clockwise). The plastic bulb holder can be drawn from its supporting slide to facilitate lamp removal.

To exchange a 12V lamp hold the glass with a soft cloth and ease the lamp carefully upwards.

⚠ **Warning:** The quartz-halogen 12V lamp must never be touched with uncovered fingers.

Service and Maintenance

Service and maintenance should only be carried out by one of the following:

The manufacturer's service personnel,
Recommended agents or
Qualified persons authorised by Clement Clarke International Ltd.

Technical Manual

A Technical Manual (part no. 1902076) containing maintenance information and wiring diagrams etc. for 2000 series Synoptophores, is avaliable from Haag-Streit UK Limited.

21. Cleaning

When an instrument is returned for service and repair it would be advisable to clean it with a suitable cotton cloth using a disinfectant (diluted, following the manufacturer's instructions on the bottle, for surface cleaning).

When cleaning, particular attention should be shown to the following:

Forehead rest (106),
Chinrest (105),
Handles for adjustment of horizontal angle (108)
and Breathshield (107).

Scope of action
Non-immersion manual cleaning methods are appropriate for low risk items (those items that come into contact with intact skin or do not contact the patient) where soaking in aqueous solutions, e.g. electrical and electronic equipment, will compromise the device.

Alcohol wipes should be used to clean electrical contacts on equipment (avoid contact with plastic parts or enclosures as alcohol is a solvent).

Equipment required
- A warm water/detergent solution at correct dilution.
- A clean, disposable, absorbent, non-shedding cloth for application of detergent solution.
- A clean, disposable, absorbent, non-shedding.
- An appropriate chemical neutraliser, first aid kit and eyewash bottle, in case of splashing with detergent.

Procedure
If the item is electrical; ensure that it is disconnected from the mains supply before commencing the cleaning procedure.

Make sure that the device/lamps have cooled down before cleaninng.

Wearing protective clothing, immerse the cleaning cloth in the detergent solution and wring thoroughly.

Commencing with the upper surface of the item, wipe thoroughly ensuring that detergent solution does not enter electrical components.

Periodically rinse the cloth in clean water and repeat the above steps.

Surfaces should be carefully hand-dried using a cloth. Note: Non-immersion, manual cleaning is not a disinfection process, but where an alcohol wipe is used to dry surfaces, this may have a disinfecting effect.

Safely dispose of cleaning materials and alcohol wipes, if used.

Monitoring and Control

- Staff training
- Physical application
- Nature of soil
- Accessibility of cleaner to item/part of equipment
- Detergent concentration

Safety precautions

- Always wear protective waterproof clothing, robust gloves and eye protection if splashing is likely to occur.

- After removing protective clothing, wash and dry hands thoroughly.

- Avoid splashing.

Precautions should be taken when using alcohol, as it is flammable.

The 'pooling' of alcohol on equipment should be avoided and alcohol evaporation ensured, if necessary by forced air-drying. Care should also be taken to ensure that alcohol does not enter the item e.g. via ventilation slots.

The above was written with reference to; Sterilization, Disinfection and cleaning of Medical Devices & Equipment: Guidance on Decontamination from the Microbiology Advisory Committee to the Department of Health Medical Devices Agency (MAC manual section 2 page 20 updated April 2005)

22. Correct Disposal of this Product

The Waste Electrical and Electronic Equipment Directive (WEEE Directive) aims to minimise the impact of electrical and electronic goods on the environment, by increasing re-use and recycling and reducing the amount of WEEE going to landfill. It seeks to achieve this by making producers responsible for financing the collection, treatment, and recovery of waste electrical equipment, and by obliging distributors to allow consumers to return their waste equipment free of charge.

Haag Streit UK Ltd is a producer of Electrical & Electronic goods therefore we have registered our business with the Government Environment Agency through a registered compliance scheme.

Scheme operator :

Valpakweee Compliance
Valpak Ltd
Stratford Business Park
Banbury Road
Stratford-upon-Avon
CV37 7GW

Producers Number: WEE/HA0234YV/PRO

Haag Streit UK Ltd have marked all its applicable goods with the crossed out wheeled bin symbol. This will help separate WEEE from other waste streams. We will include a producer's identification mark and show that the product was placed on the market after 13 August 2005; a thick bar underneath the wheeled bin symbol is used to denote this.

END OF LIFE – HOUSHOLD USERS

Household users should contact their local government office, for details of where and how they can take all applicable items for environmentally safe recycling.

END OF LIFE

For all applicable devices under the WEEE directive, which have reached their end of life, please contact Haag Streit customer services on 01279 414969 who will instruct you on how to return your device for disposal.

23. EMC Declaration

With the increased number of electronic devices such as PC's and mobiles, medical devices in use may be susceptible to electromagnetic interference from these devices. Which may result in incorrect operation of the medical device and create a potentially unsafe situation. Medical devices should also not interfere with other devices.

In order to regulate the requirements for EMC with the aim to prevent unsafe product situations, the EN60601-1-2 standard has been implemented. This standard defines the levels of immunity to electromagnetic interferences as well as maximum levels of electromagnetic emissions for medical devices.

Medical devices manufactured by Haag-Streit UK Ltd conform to this EN60601-1-2 standard for both immunity and emissions.

Nevertheless, special precautions need to be observed:

The use of accessories and cables other than those specified by Haag-Streit UK Ltd, with the exception of cables sold by Haag-Streit UK Ltd as replacement parts for internal components, may result in increased emission or decreased immunity of the device.

The medical devices should not be used adjacent to or stacked with other equipment. If adjacent or stacked use is unavoidable, the medical device should be seen to operate normally as it should in this situation.

Further guidance regarding the EMC environment (in accordance with EN60601-1-2) in which the device should be used is available at www.haag-streit-uk.com

24. Device ranges and tolerances

Interpupillary distance	Adjustable range	45mm to 75mm
Horizontal movement of each arm independently	Outwardly	40°/70$^{\Delta}$
	Inwardly	50°/100$^{\Delta}$
	Graduation	± 1°/2$^{\Delta}$
Vertical rotation of each arm indepentently	Angle of elevation	30$^{\Delta}$
	Angle of depression	30$^{\Delta}$
Torsion movement of visual targets (cyclo-)	Clockwise range	20$^{\Delta}$
	Anti-clockwise range	20$^{\Delta}$
	Graduation	± 1$^{\Delta}$
Chin-rest height	Adjustable range from chinrest to eyepiece centres	71mm to 133mm from bottom datum

$^{\Delta}$Prism dioptre equivalent correction at the patient's eye. The actual linear tolerance will depend on the optical path length of the occular arms.

Adjustment tolerence		**Accuracy**
Interpupillary distance setting		±0,5mm
Lateral alignment of targets at zero setting		±0.5° or 1 dioptre$^{\Delta}$
Vertical alignment of targets at zero setting		±0.125° or ±0,25 dioptre$^{\Delta}$
Torsional alignment of targets at zero setting		±0.5°
Alignment of targets throughout the horizontal movement range with both arms locked together	Vertically	±10°
	Laterally	±0.5°
	Torsionally	±10°

$^{\Delta}$The tolerances given are expressed in degrees when the scale is graduated in degrees, and in prism dioptres when graduated in prism dioptres.

Synoptophore Model 2001

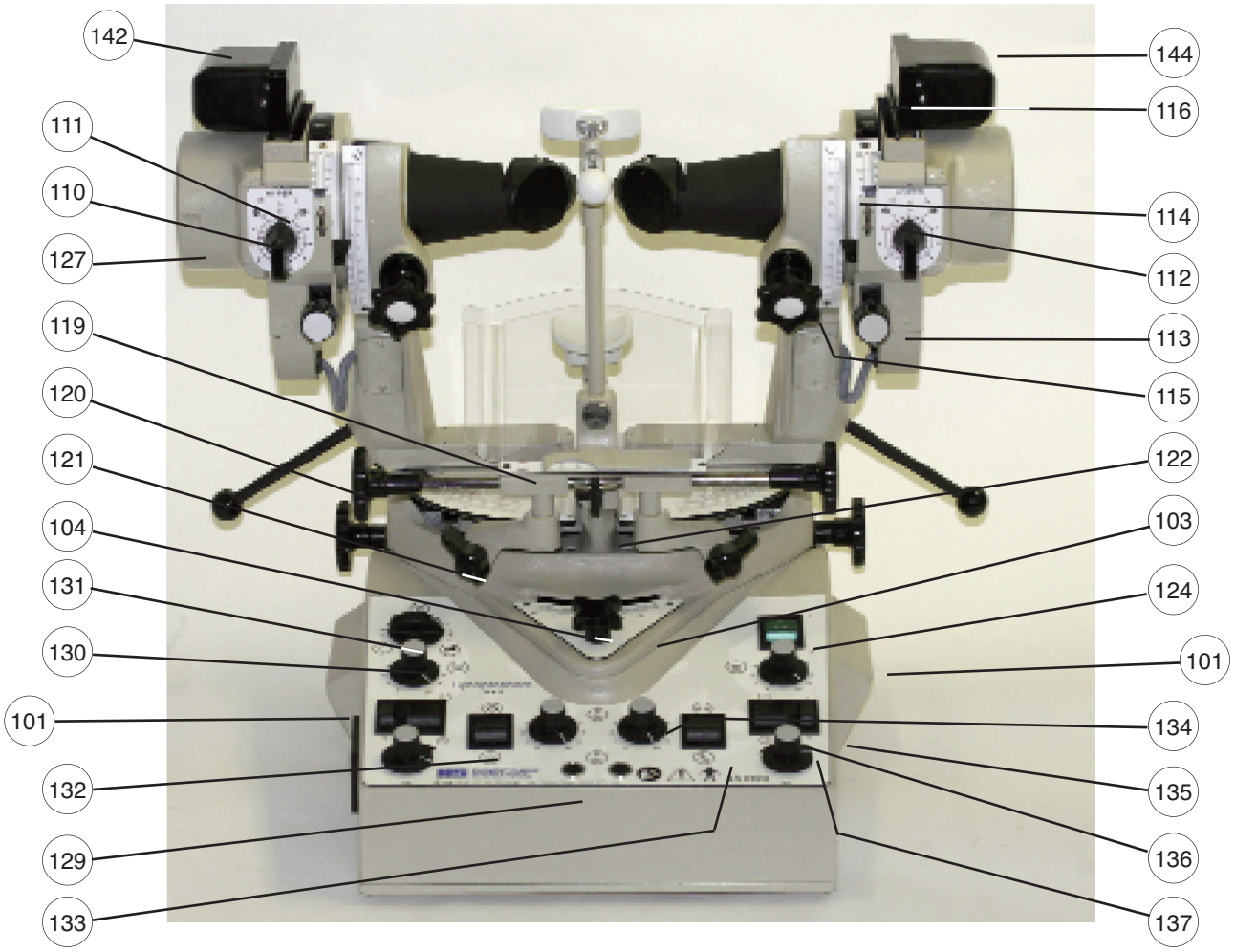

Mechanical

101. Carrying handles (2)
102. Interpupillary distance selection controls (2)
103. Interpupillary distance scale
104. Chinrest height control
105. Chinrest
106. Forehead rest
107. Breathsheild
108. Handles for adjustment of horizontal angle between tubes (2)
109. Horizontal deviation scales (left & right) (2)
110. Vertical deviation controls (Hyper) (2)
111. Vertical deviation scales (Hyper) (2)
112. Torsional deviation scales (Cyclo) (2)
113. Torsional deviation controls (Cyclo) (2)
114. Elevation and depression scales (2)
115. Elevation and depression controls (2)
116. Slide carriers (2)
117. Slide ejectors (2)
118. Auxiliary lens holders (2)
118a. Eyepiece lens (removable) (2)
119. Horizontal vergence scale
120. Horizontal vergence controls (2)
121. Tube locking controls (horizontal) (2)
122. Central lock
123. Lever for swivelling opal screen from optical pathway (2)

Electrical

124. On/Off switch/Indicator lamp
125. Mains supply input plug and socket
126. Voltage selector
127. Lamphousing
128. Access to bulb (screw) (2)
129. Hand flashing switches (2)
130. Dimming rheostats (2)
131. Selector switch

Automatic Flashing

132. Rapid/variable switch
133. Simultaneous/alternating switch
134. Light and dark phases controls (2)

Haidinger's brushes

135. On/Off switches (Haidinger's Brushes)
136. Reversing switches (2)
137. Speed controls (2)
138. Haidinger brush assembly (2)
139. Blue filters (removable) (2)
140. Iris diaphragms - controls (2)
141. Fuses
142. Halogen after-image lamp
143. Slide illumination lamp

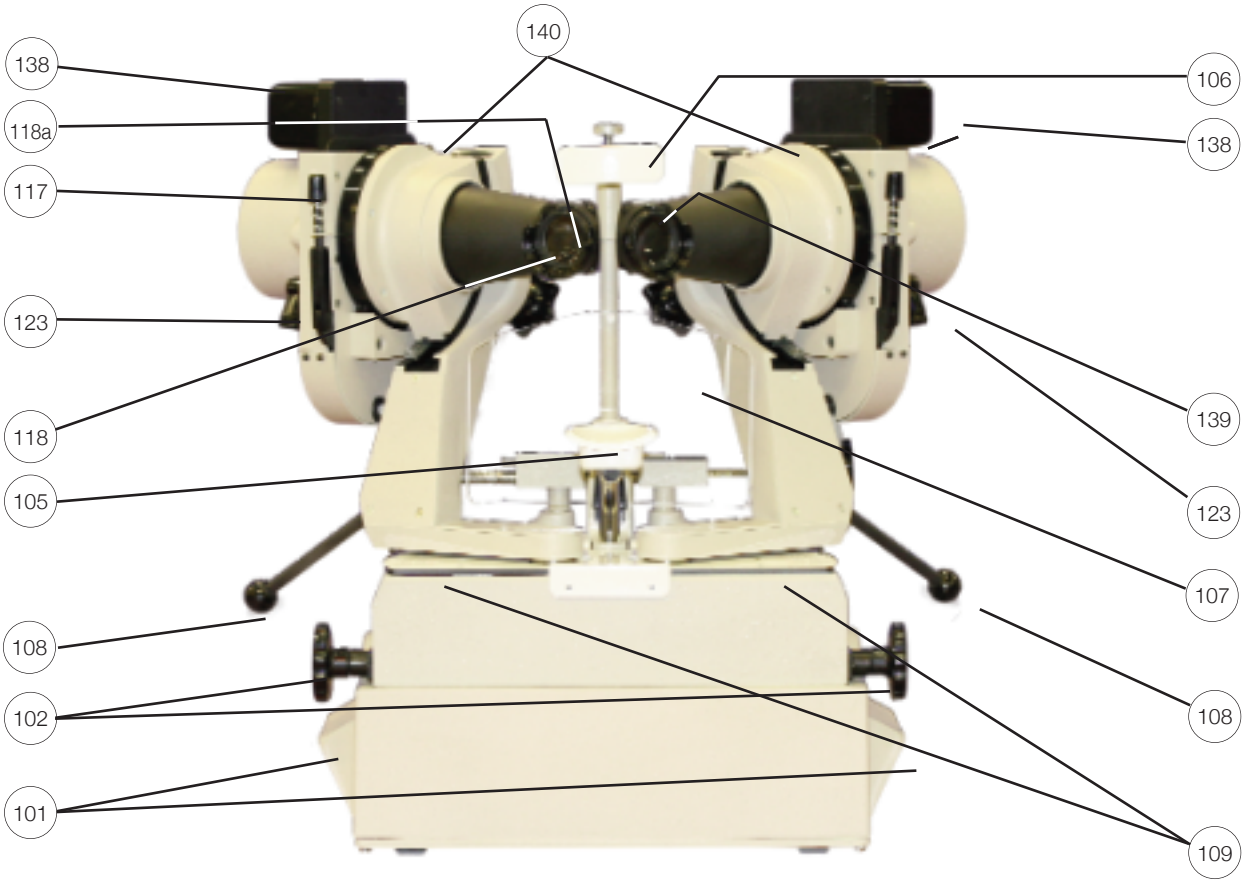
140
138
118a
117
123
118
105
108
102
101
106
138
139
123
107
108
109


126
125
141

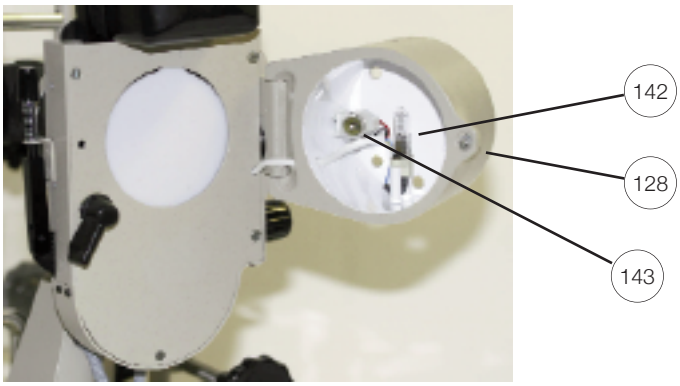
142
128
143

Synoptophore Model 2002

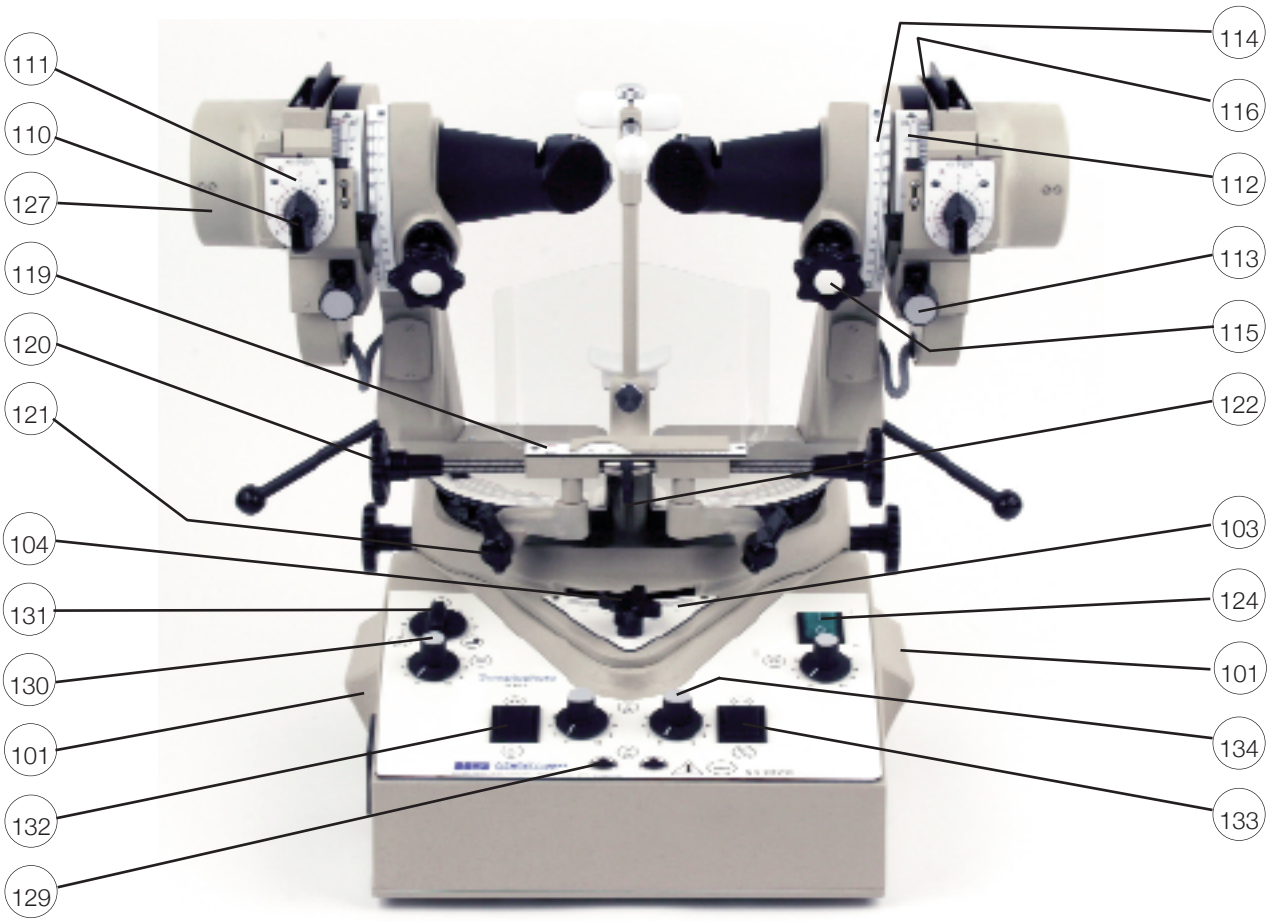

Mechanical

101 Carrying handles (2)
102 Interpupillary distance selection controls (2)
103 Interpupillary distance scale
104 Chinrest height control
105 Chinrest
106 Forehead rest
107 Breathshield
108 Handles for adjustment of horizontal angle between tubes (2)
109 Left hand scale plate (1)
109a Right hand scale plate (1)
110 Vertical deviation controls (2)
111 Vertical deviation scales (2)
112 Torsional deviation scales (2)
113 Torsional deviation controls (2)
114 Elevation and depression scales (2)
115 Elevation and depression controls (2)
116 Slide carriers (2)
117 Slide ejectors (2)
118 Auxiliary lens holders (2)
118a Eyepiece lens (removable) (2)
119 Horizontal vergence scale
120 Horizontal vergence controls (2)
121 Co-ordinating arm lock (2)
122 Central lock
123 Lever for swivelling opal screen from optical pathway (2)

Electrical

124 On/Off switch/Indicator lamp
125 Mains supply input plug and socket
126 Voltage selector
127 Lamphousing
128 Access to bulb (screw) (2)
129 Hand flashing switches (2)
130 Dimming rheostats (2)
131 Selector switch

Automatic Flashing

132 Rapid/variable switch
133 Simultaneous/alternating switch
134 Light and dark phases controls (2)
141 Fuses
142 Halogen after-image lamp
143 Slide illumination lamp

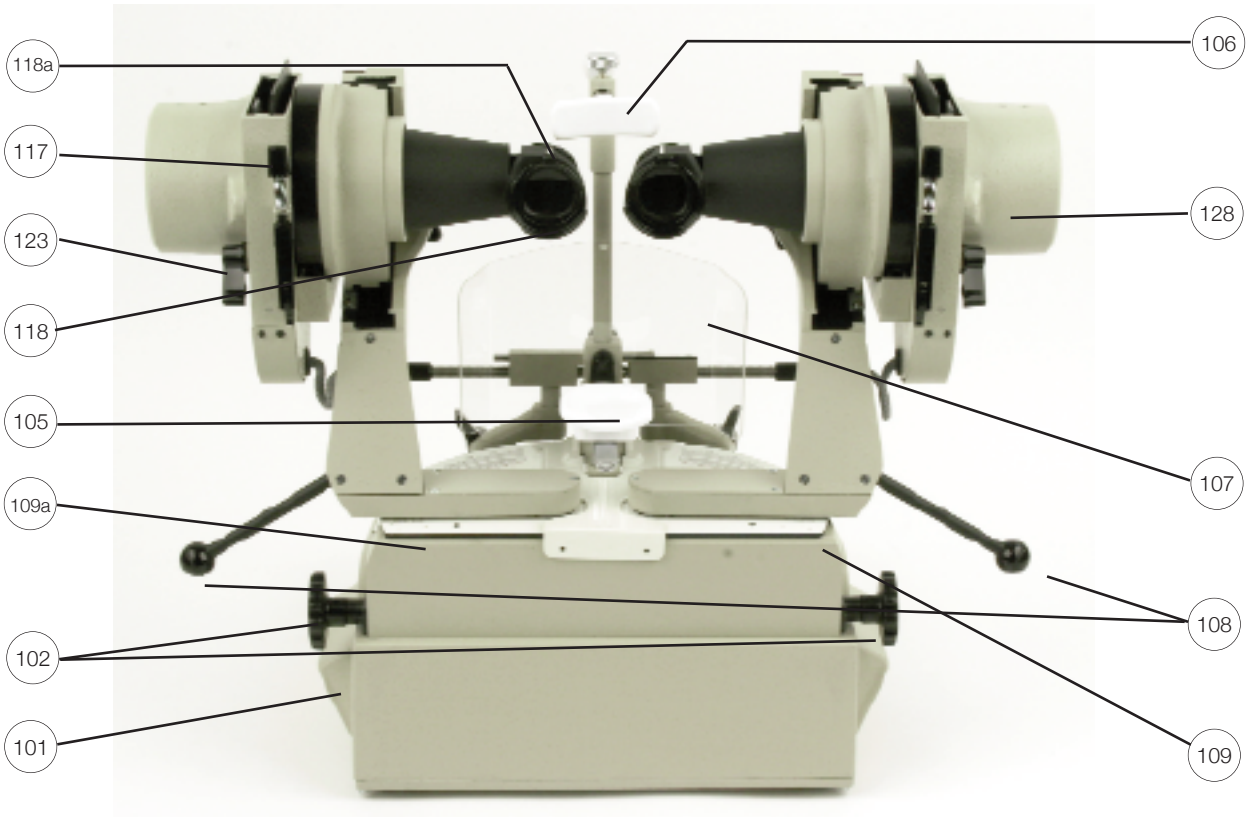
118a
117
123
118
105
109a
102
101
106
128
107
108
109

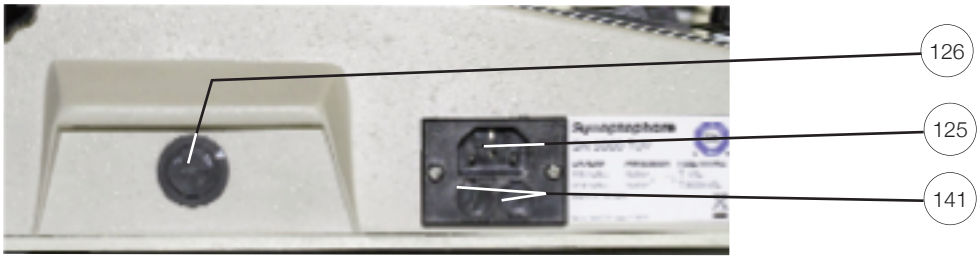
126
125
141

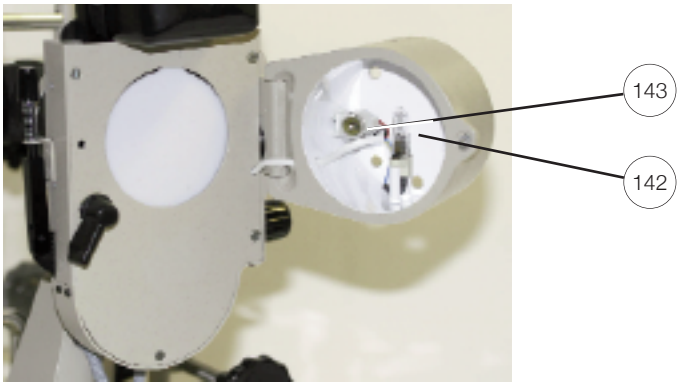
143
142

Synoptophore Model 2003

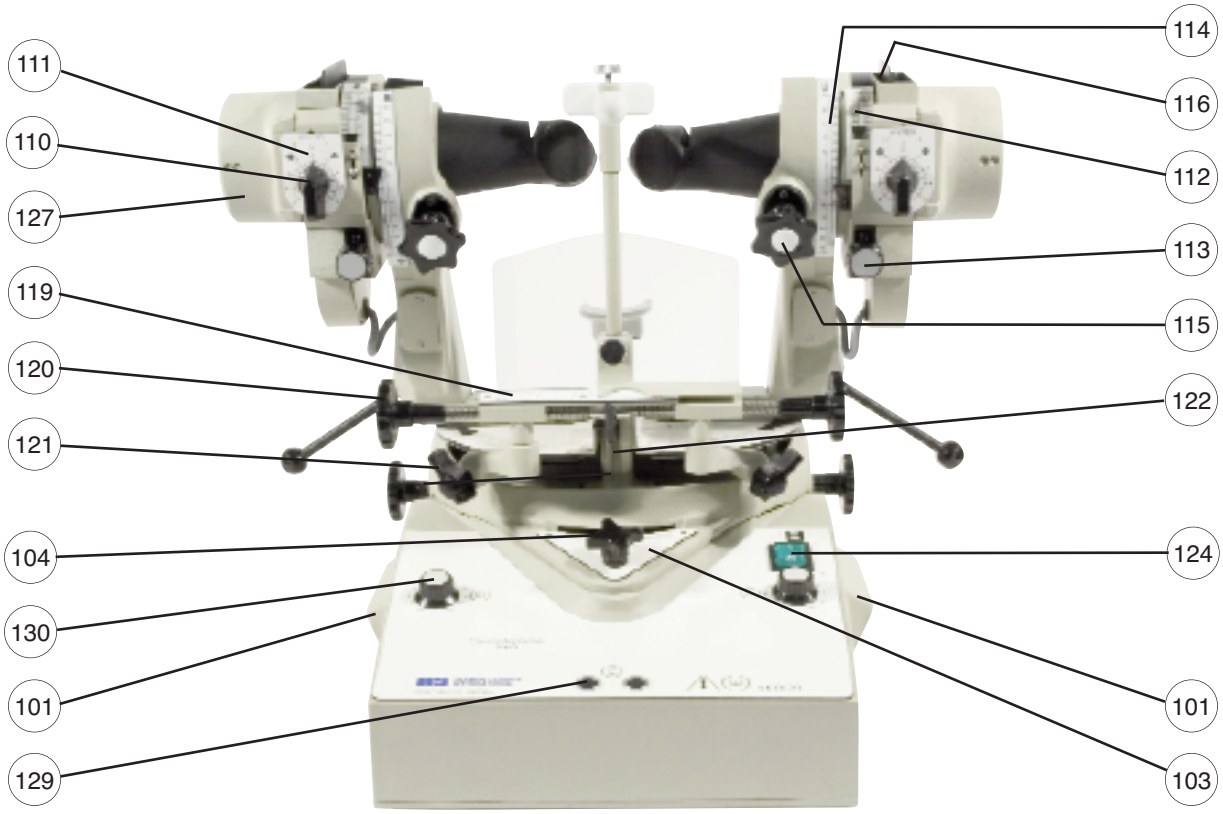

Mechanical

101 Carrying handles (2)
102 Interpupillary distance selection controls (2)
103 Interpupillary distance scale
104 Chinrest height control
105 Chinrest
106 Forehead rest
107 Breathshield
108 Handles for adjustment of horizontal angle between tubes (2)
109 Left hand scale plate (1)
109a Right hand scale plate (1)
110 Vertical deviation controls (2)
111 Vertical deviation scales (2)
112 Torsional deviation scales (2)
113 Torsional deviation controls (2)
114 Elevation and depression scales (2)
115 Elevation and depression controls (2)
116 Slide carriers (2)
117 Slide ejectors (2)
118 Auxiliary lens holders (2)
118a Eyepiece lens (removable) (2)
119 Horizontal vergence scale
120 Horizontal vergence controls (2)
121 Co-ordinating arm lock (2)
122 Central lock
123 Lever for swivelling opal screen from optical pathway (2)

Electrical

124 On/Off switch/Indicator lamp
125 Mains supply input plug and socket
126 Voltage selector
127 Lamphousing
128 Access to bulb (screw) (2)
129 Hand flashing switches (2)
130 Dimming rheostats (2)

Automatic Flashing

132 Rapid/variable switch
133 Simultaneous/alternating switch

141 Fuses

143 Slide illumination lamp

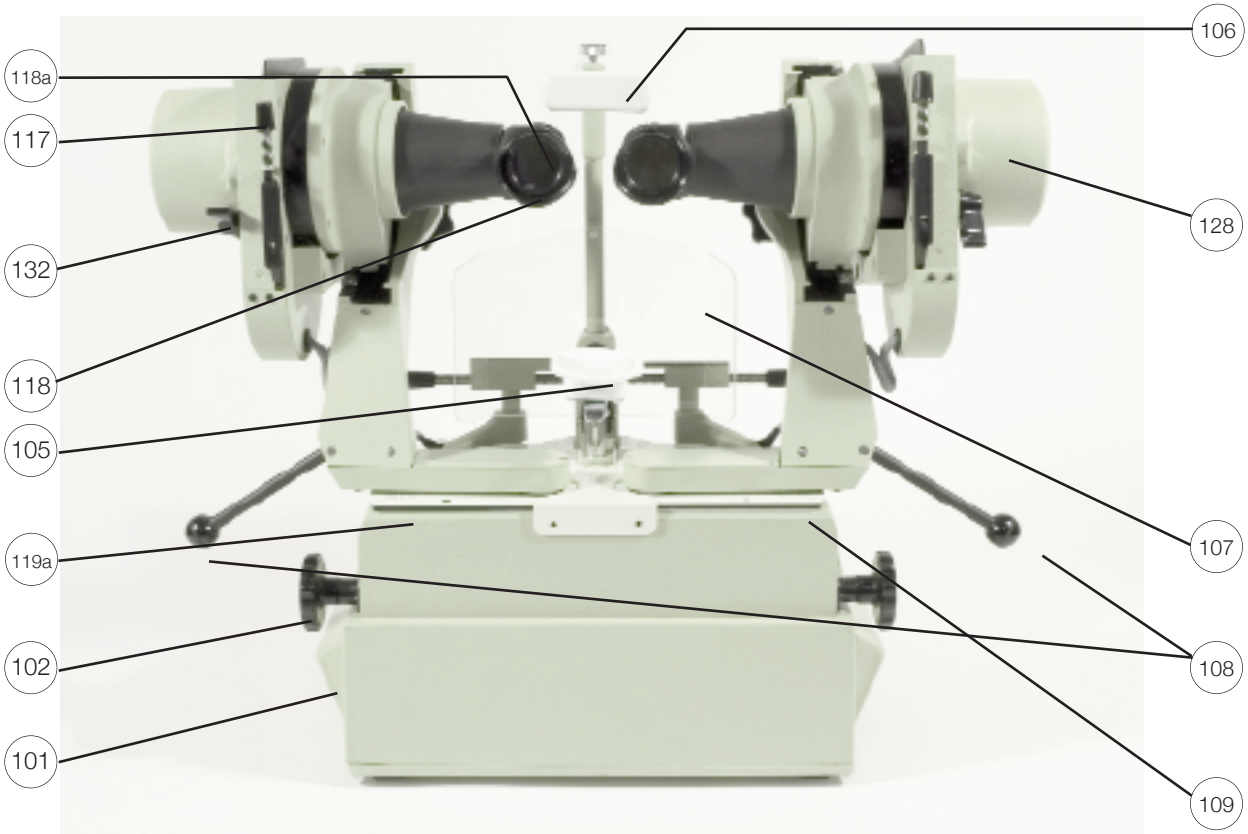
118a
117
132
118
105
119a
102
101
106
128
107
108
109

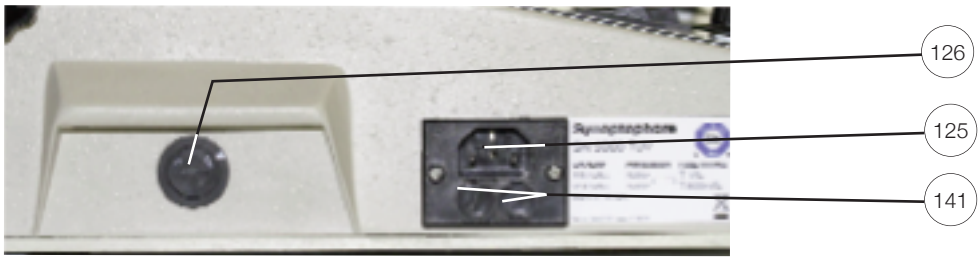
126
125
141

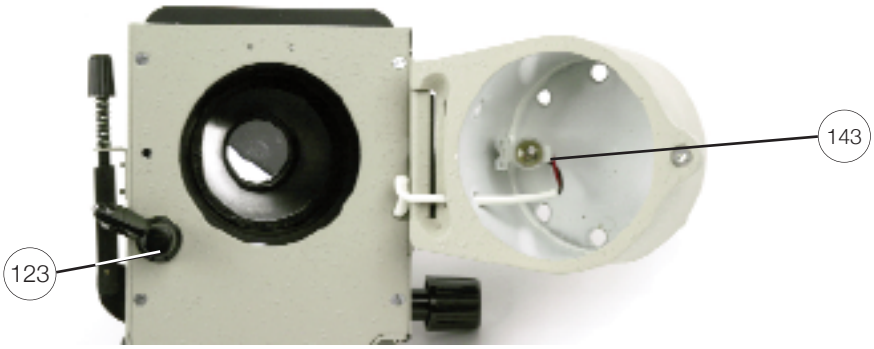
143
123

Synoptophore Slides

Synoptophore Slides, 3 1/4" square, are suitable for use with the following instruments manufactured by Haag-Streit UK Ltd:

2001 Synoptophore -In current production
2002 Synoptophore -In current production
2003 Synoptophore -In current production

The Slides are photographically produced on translucent film (some, indicated with* are on transparent film for use with Haidinger's Brush), which, in the case of the coloured ones, are then hand-painted. They are enclosed between clear plastic plates and bound in coloured vinyl (non-sticky) Sellotape. The resulting slides are virtually unbreakable. For easy identification the slides are bound in different coloured Sellotape according to their category:

White Binding - original Maddox series
- labelled with prefix **'A'**

Yellow Binding - Stereoscopic Vision series
- labelled with prefix **'D'**

Green Binding - Fusion series
- labelled with prefix **'F'**

Red Binding - Simultaneous Perception series
- labelled with prefix **'G'** or **'H'**

Blue Binding - Special purpose slides
- labelled with prefix **'S'**
- Mayou Series of 8 slides

Series 'A' Maddox Test Series - White Binding

(Visual angles are approximate - 'V' is Vertical, 'H' is Horizontal)

A 1/2	Red Circle ø8° in Green Square 12 1/2°
A 3/4	Red Circle ø3 1/2° in Green Square 6 1/2°
A 5/6	Red Circle ø1 1/2° in Green Square 3°
A 7/8	Fusion object 7° V 9° H
A 9/10	Fusion object
A 11/12	Fusion object 1° square
A 13/14	Cross (Black) 8°V 5°H
A 15/16	Angle Gamma and Arrow Head
A 17/18	Phoria test (Cross in circle)
A 19/20	Phoria test (Scales and Pointers)
A 21/22	Blind Spot test

*On transparent film suitable for use with Haidinger's Brush.

Series 'S' Special Purpose Slides - Blue Binding

S 1/2	Animation Slide - Pony and Trap - To be used with Automatic Flashing Unit set at ALT (alternating) with light and dark controls at same number.
S 3/4	After-image Slide - 1 Horizontal Streak and 1 Vertical Streak, each with central red fixation mark. These slides have one matt surface which must be nearest to the patient.
S 5	Single slide on transparent film of Black Spot. For use with Haidinger's Brush.
S 6	Alternative After-image slide. Cross.

Mayou Series of 8 Slides - Blue Binding

(Sold only in the set of 8 slides)

Slide No. 1	15° red square with three small squares in centre
Slide No. 2	15° red square with one small square in centre
Slide No. 3	12° red square
Slide No. 4	9° red square
Slide No. 5	6° red square
Slide A	1° rocking horse
Slide B	1° ball
Slide C	1° boat

Series 'D' Stereoscopic Vision Series - Yellow Binding

(Visual angles are approximate and include the controls)

D 1/2	Bucket (Black and White) 10°ø
D 3/4	Spears 11° V 10° H
D 5/6	Swings 11° V 7 1/2° H
D 7/8	Wicket 10° V 3° H
D 9/10	Tennis Net 5° V 10 1/2° H

Series 'D' Stereoscopic Vision Series - Yellow Binding

D 11/12	Five Balls 8° square
D 35/36	Eight Shapes 7½° V 9° H (Black background)
D 37/38	Seal balancing ball (Black background)
D 41/42	Pedestrian crossing 5° V 11° H (Black background)
D 43/44	Six coloured Lanterns 7° Square (Black background)
D 45/46	Three Skittles 7° Square
D 47/48	Four Aeroplanes 7° Square
D 49/50	Aviary with 5 birds 6° V 7½° H (Black background)
D 51/52	Aquarium with 4 fish 9° V 7½° H (Black background)
D 53/54	Christmas Tree 10° V 9° H (Black background)
D 55/56	Juggler 9° Square (Black background)
D 57/58	Road Signs 9° Square
D 59/60	Train and Bridge 9° V 8° H
D 61/62	Horse jumping fence 5° V 5½° H
D 63/64	Planets and Stars 7° V 6° H (Black background)
D 65/66	Aeroplane and 4 Parachutists - 17° V 15° H (Black background)
D 69/70	Bucket with handle 11°ø (Black background)
D 71/72	Bucket (as D1 & 2) 2°ø

Series 'F' Fusion Series - Green Binding

(Visual angles are approximate and include controls)

F 1/2	'F' and 'L' in circle 9°ø Letter 'E' 4½° Square
F 3/4	Rabbit - peripheral attached controls flower and tail - 11° Square
F 5/6	Dovecote - central controls 2 doves - 15° V 9° H
F 7/8	Traffic Lights - vertical controls red and green lights - 5½° V 1° H
F 9/10	House - central controls 2 trees - 6½° Square

Series 'F' Fusion Series - Green Binding - *continued*

F 13/14	Mrs Bruin - peripheral controls pail and broom - 9° V 10° H
F 15/16	Minnie Mouse - vertical controls parasol and tail - 9° V 7½° H
F 17/18	Mickey Mouse - peripheral controls mallet and nail - 9½° Square
F 27/28	Jumbo - peripheral controls boat and sandcastle - 9½° V 12° H
F 31/32	Frog - peripheral controls, dragonflies and waterlilies - 9° V 15° H
F 37/38	Fox - central vertical controls red jacket and blue trousers - 10° Square
F 39/40	Black Cat - peripheral vertical controls head and tail - 15° V 8° H
F 41/42	Black Cat - peripheral vertical controls head and tail - 3½° V 11½° H
F 43/44	"Speak no evil" - peripheral controls 2 monkeys 8½° V 9° H
F 47/48	Girl on stairs - central contols picture and cat - 12°ø
F 49/50	Yacht - peripheral controls 2 seagulls - 6° V 7° H
F 51/52	Squirrel - peripheral controls acorn and leaves - 8° V 7° H
F 57/58	Lighthouse - peripheral controls 2 keepers - 11° V 9° H
F 59/60	Bear - peripheral vertical controls honey pot and tub - 6½° V 3° H
F 61/62	Robin on spade - peripheral controls daffodil and flowerpot - 11½° V 8° H
F 65/66	Rabbit - peripheral controls flower and tail - 7° square
F 69/70	House - central controls 2 trees - 3½° Square

Series 'F' Fusion Series - Green Binding - *continued*

F 71/72 Fox - central vertical controls red jacket and blue trousers - 7° Square
F 75/76 "Speak no evil" - peripheral controls 2 monkeys - 1° V 1½° H
F 77/78 Watering can - peripheral controls fork and flowerpot - 4° V 6½° H
F 79/80 Tree - peripheral controls bird and rabbit - 4° V 5½° H

F 81/82 Apple - peripheral controls cherries and strawberry - 5° V 6½° H
F 87/88 Plate - central controls knife and fork - 4½° V 5° H
F 89/90 Test Type - central controls 2 letters - 3½° V 1° H

F 91/92 Pink Elephant - peripheral controls glass and bottle - 6° Square
F 93/94 Chalet - central controls man and woman - 7° Square
F 95/96 Clown - peripheral controls club and ball - 9° V 7° H
F 99/100 Cat - peripheral controls butterfly and tail - 11° V 16° H

F 103/104 Mother Rabbit - peripheral controls two baby rabbits - 7½° V 7° H
F 105/106 Santa - peripheral controls chimney and bag of toys - 6½° V 6° H
F 107/108 Palm Tree - peripheral controls boy and girl - 6° V 5° H
F 109/110 Clown - peripheral controls bugle and ball - 6° V 4½° H

F 111/112 Bear - peripheral controls 2 baby bears - 7° H Square
F 113/114 Hunter- peripheral controls, rabbit and gun - 9° V 6° H
F 115/116 Sailor - peripheral controls, birdcage and kitbag - 5° Square
F 117/118 Post-box - peripheral controls, 2 envelopes - 4° Square
F 119/120 Rabbit - peripheral controls, flower and tail - 2½° Square

F 121/122 Jumbo - peripheral controls boat and sandcastle - 6½° V 8½° H
F 123/124 Donkey - peripheral controls carrot and tail - 5° Square
F 125/126 Lamb - peripheral controls flowers and tail - 5° V 6° H
F 129/130 Suitcase - central controls 2 labels - 3½° V 5½° H

F 133/134 Telephone dial - central controls (vertical) - exchange name and number - 3½° ø
F 135/136 Telephone dial - central controls (vertical) - exchange name and number - 18° ø
F 137/138 Helicopter - central controls door and star marking - 2½° V 5° H

F 141/142 Octopus - central controls pipe and spectacles - 8° V 10° H
F 145/146 Cowboy - central controls gun and lasso - 7° V 7½° H
F 147/148 Red Indian - central controls axe and bow - 1½° V 2° H

F 151/152 Witch on broomstick - peripheral controls pumpkin & sheaf of corn - 15° Square
F 155/156 Mouse - peripheral controls ears and tail - 2° V 1° H (macular)

*F 161/162 Charlie Chaplin - peripheral controls flowers and stick - 1½° V 1° H
*F 163/164 Charlie Chaplin - peripheral controls flowers and stick - 2½° V 1½° H
*F 165/166 Snowman in Circle - peripheral controls brush and stick - 3½° ø
F 167/168 Vintage cars - peripheral vertical controls 2 cars - 7½° V 3° H

*On transparent film suitable for use with Haidinger's Brush.

Series 'F' Fusion Series - Green Binding - *continued*

F 177/178 Bubble Car - central controls 2 men - 7° V 13° H

F 179/180 TV Set - peripheral/central vertical controls lampshade & picture - 5° V 3° H

F 191/192 Seahorse - peripheral controls shell and starfish - 3° Square

F 195/196 Diamond shaped measurement slide - central controls 0 and ±5° V 5° H

F 197/198 Diamond shaped measurement slide - central controls 0 and ±3° V 3° H

*F 201/202 Balloon - peripheral vertical controls moon and flag - 4½° V 3½° H

F 207/208 Bubble Car - central controls two men - 4° V 8° H

F 213/214 Car - peripheral controls tree and dog - 7½° V 10° H

F 225/226 Yogi Bear - peripheral controls Boo Boo and tree - 10° Square

F 227/228 Yogi Bear - peripheral controls Boo Boo and cake - 8° V 8½° H

F 229/230 Yogi Bear - peripheral controls apple and banana - 6°V 5°H

F 231/232 Huckleberry Hound - peripheral controls hat and whip - 8° V 6° H

F 239/240 Ding-a-ling - peripheral controls dovecot and chick - 9° V 11° H

F 243/244 Prehistoric car - central controls Fred and Wilma - 9° V 12° H

F 247/248 Betty - peripheral/central controls sunshade and book - 6° V 7° H

F 249/250 Sooty - peripheral controls inkpot and bell - 2° V 2° H

F 251/252 Sweep - peripheral controls hat and gun - 4° V 2°H

*On transparent film suitable for use with Haidinger's Brush.

Series 'G' Simultaneous Perception Series - Red Binding

(Visual angles are approximate)

G 1/2	Soldier	(12° V 2½° H) and Sentry Box (15° V 9½° H)
G 3/4	Lion	(7° V 11° H) and Cage (11° V 14° H)
G 5/6	Spider	(7° V 7° H) and Web (11° V 11° H)
G 7/8	Car	(5½° V 8½° H) and Garage (11° V 13° H)
G 9/10	Union Jack	(7½° V 12° H) and Union Jack (7½° V 12° H)
G 13/14	Butterfly	(4° V 6° H) and Net (7° V 7° H)
G 15/16	Parrot	(7° V 5° H) and Cage (9° V 6° H)
G 17/18	Fish	(6° V 8° H) and Bowl (9° V 10½° H)
G 19/20	Cockerel	(5½° V 4° H) and House (9° V 14° H)
G 21/22	Pig	(6° V 4° H) and Sty (8° V 10° H)
G 23/24	Chicks	(5½° V 8° H) and Cage (9° V 11½° H)
G 25/26	Sailor	(1° V 1° H) and Ladder (6° V 1° H)
G 27/28	Sun	(1° V 1° H) and Corona (2½° V 2½° H)
G 29/30	Engine	(1° V 1° H) and Frame (4½° V 4½° H)
G 31/32	Three objects	(1° V 3° H) and Three squares (1½° V 4° H)
G 33/34	Aeroplane	(2½° V 9° H) and Hanger (8° V 13½° H)
G 35/36	Lion	(1° V 1½° H) and Cage (1½° V 2° H)
G 37/38	Parrot	(4° V 3° H) and Cage (5° V 3½° H)
G 39/40	Chicks	(3° V 5° H) and Cage (5° V 7° H)
G 41/42	Policeman	(3° V 1½° H) and Sentry Box (4° V 3° H)
G 43/44	Dog	(3° V 2° H) and Kennel (4½° V 4° H)
G 45/46	Football	(1½° V 1½° H) and Net (2½° V 4° H)
G 47/48	Fish	(1½° V 2° H) and Tank (2½° V 3° H)
G 49/50	Lamb	(6° V 8° H) and Gate (8½° V 9½° H)
G 51/52	Mouse	(1° V 1° H) and Three squares (1½° V 4° H)
G 55/56	Lorry	(8° V 6½° H) and Garage (11° V 13° H)
G 57/58	Punch	(7° V 6° H) and Stage (13½° V 13½° H)
G 59/60	Tractor	(3° V 6° H) and Barn (5° V 7° H)
G 61/62	Rabbit	(1° V ½° H) and Three circles (1½° V 6° H)
G 63/64	Flowerpot	(5° V 4° H) and Window (6½° V 8° H)
G 65/66	Flowerpot	(2½° V 2° H) and Window (3½° V 4° H)
G 67/68	Mouse	(2½° V 4° H) and Mousehole 8° V 13° H)
G 71/72	Bus	(3° V 7° H) and Parallel lines (3° V)
G 73/74	X	(1° V 1° H) and Square (1° V 1° H)
G 75/76	X	(3° V 3° H) and Square (3° V 3° H)
G 77/78	Budgie	(1° V 1° H) and Cage (3° V 3° H)

Series 'H' Simultaneous Perception Series - Red Binding

(Visual angles are approximate)

H 1/2	Soldier	(7½° V 1½° H) and Sentry Box (9½° V 6° H)
H 3/4	Soldier	(6° V 1° H) and Sentry Box (7½ ° V 5° H)
H 5/6	Soldier	(2½° V ½° H) and Sentry Box (3° V 2° H)
H 7/8	Lion	(4½° V 7½° H) and Cage (7° V 9½° H)
H 9/10	Lion	(3½° V 6° H) and Cage (5½° V 7° H)
H 11/12	Lion	(2° V 3° H) and Cage (3° V 4° H)